Mechanical Cam Switches

BNS 813-FL-60-186
Order Code: BNS002M

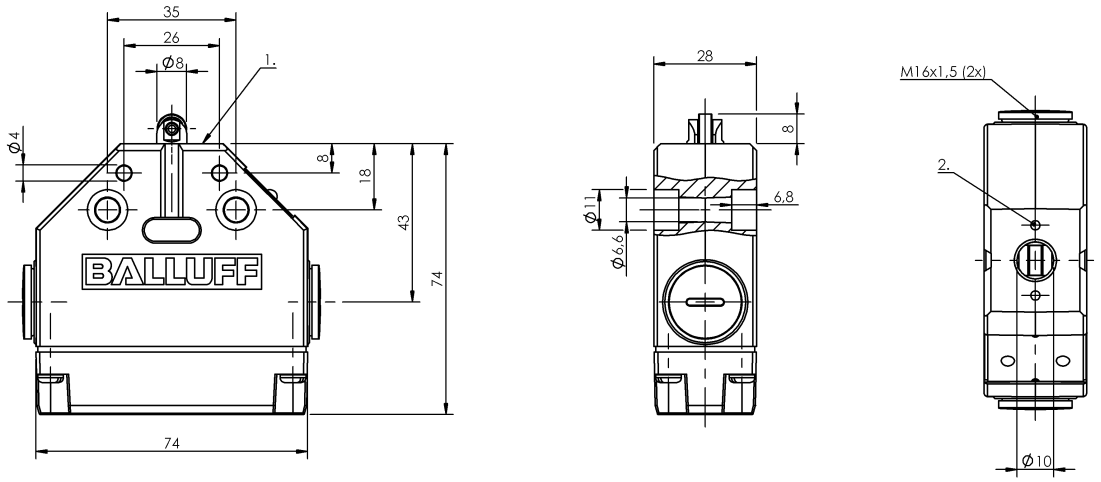

1) Reference edge, 2) Mark. Safety switch position

A 064828

Basic features

Approval/Conformity	CE CCC WEEE
Basic standard	IEC 60947-5-1
DIN switch	DIN 43693
Operating principle	1. Switch position: Mechanical
Version	Safety EN 60204-1

Display/Operation

Function indicator	1. Switch position: None

Electrical connection

Connection type	1. Switch position: Screw terminal

Electrical data

Continuous current	1. Switch position: 6 A
Rated operating voltage Ue	1. Switch position: 250 V AC
Switching function mechanical	Dual changeover One NO and one NC galvanically isolated Normally open with snap funct. Double-interrupting NC forced-opening per VDE
Switching rate	1. Switch position: 160/min

Environmental conditions

Ambient temperature	-5...85 °C
Protection degree	IP67

Functional safety

B10d (EN ISO 13849-1)	BSE 85: 1 mil. Switching operations

Material

Housing material	Aluminum, Anodized
Housing material, surface protection	Anodized
Material contacts	1. Switch position: Silver
Plunger material	1. Switch position: Stainless steel (1.4034)

Mechanical data

Approach direction	longitudinal, parallel to attachment surface
Approach speed	1. Switch position: 80 m/min
Dimension	74 x 28 x 74 mm
Distance cam - reference edge	1. Switch position: 4.50...5.00 mm
Flange, feed-through	None
Installation	any
Life expectancy mechanical	1. Switch position: 1 million Switching operations
Number of switching positions	1x Roller bearing
Plunger spacing 1st switch position	14 mm
Plunger style	1st switch position: Roller bearing
Switch actuation force	1. Switch position: 30 N
Switching element	1. Switch position: BSE 85

Range/Distance

Reproducibility	1. Switch position: ±0.02 mm

Wiring Diagrams
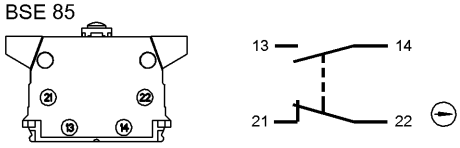
BSE 85